iLumTech
Innovation ahead

iLumTech DALI PLC-IN belongs to the Connected Lighting product family. This small device is intended to be used inside the luminaire in order to connect the luminaire to the DALI PLC network. DALI PLC-IN has to be used in combination with at least one DALI PLC Bridge than brings DALI communication to the power line. DALI PLC-IN offers possibility to connect the luminaire to the DALI PLC network without using additional DALI wiring between the luminaires. This is intended for usage in applications where two-wire cable for DALI communication is not present and reconstruction is not planned or possible.

DALI PLC-IN

Wiring diagram

Typical application example

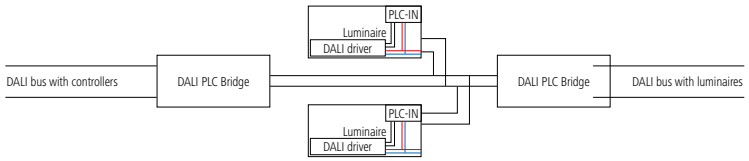

Connection inside the luminaire

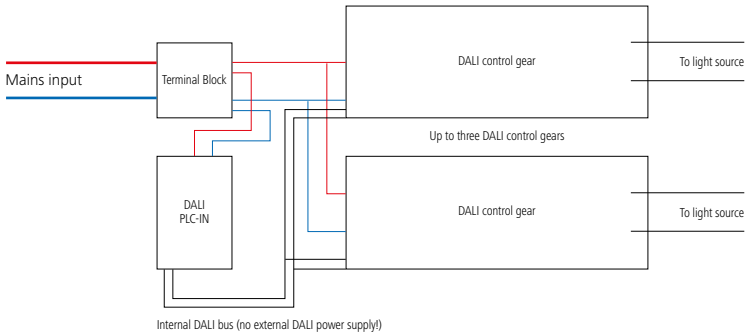

Key features

- Support of forward and backward DALI commands according to IEC 62 386-102
- Powered from mains
- DALI control output to luminaire with integrated DALI power supply
- Possibility to connect up to three DALI control gears at DALI output
- Communication error source detection
- Over-voltage protection

Installation notes

- Maximum of 64 DALI devices with unique address can be connected to single network
- No extra DALI Power supply is needed – DALI Power supply is integrated

Input parameters

DALI	12-25 V DC, output current < 20 mA
PLC	110 / 230 V AC, input current < 20 mA

Connections

DALI	0.08-2.5 mm² (AWG 28-12)
Mains	0.5-4 mm² (AWG 20-10)

Operating Conditions

Ambient Temperature Range	0 °C to +40 °C
Max. Relative Humidity	90 % (non-condensing)
Storage Temperature Range	-40 °C to 70 °C

Mechanical data

Housing	Plastic box or open frame
Dimensions	33 x 50 x 30 (mm)
Weight	32 g
IP Rating	IP20

DALI PLC-IN

1 Year Warranty

The Company reserves the right to change any product specifications without prior notification.

HEAD OFFICE
iLumTech
906 02 Dojč 419, Slovakia, Email: info@ilumtech.eu,www.ilumtech.eu

REV. 01 OCTOBER 2015