iLumTech
Innovation ahead

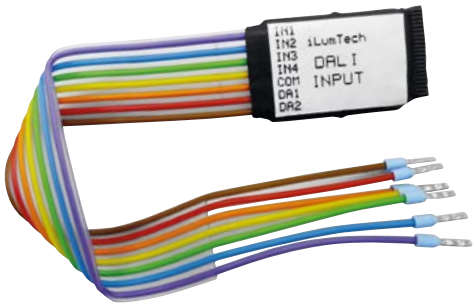

purple	Input 1
blue	Input 2
green	Input 3
yellow	Input 4
orange	COM
red	DALI bus
brown	DALI bus

The DALI Input Unit is a fully DALI-compatible interface, designed to allow customer specified switches, sensors, time clocks or other on/off control devices to be incorporated into a standard DALI installation. The DALI Input Unit is a small, pre-wired, encapsulated PCB module and it is suitable for inclusion into all standard size back boxes together with a suitable mains rated switch.

DALI Input Unit

Wiring diagram

Input 1-4	positive pole of input
COM	negative pole of input (common for all inputs)
DALI	connection to DALI bus (polarity free)

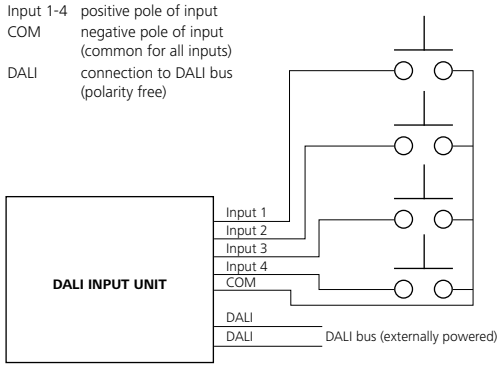

Input	Address	Short press	Long press
Input 1	Broadcast	Recall Max level	UP
Input 2	Broadcast	OFF	DOWN
Input 3	Group 1	Recall Max level	UP
Input 4	Group 1	OFF	DOWN

Key features

- Powered from DALI bus, compatible with standard DALI rating
- Up to four user inputs
- Default functions – ready to use out-of-box
- Small dimensions (L x W x H): 27 x 20 x 4 mm
- DALI consumption < 9 mA

Function

DALI Input Unit detects short-circuit connection between wires Input 1-4 and COM. Module is designed to be used with standard push buttons – short-circuit connection is the active state. The logic of the module differentiates between short and long press of the push buttons. Short press is detected when the short-circuit detection lasts shorter than 1 second. If the short-circuit connection lasts longer it is detected as long press. User can configure different reaction to short and long press.
Each input of DALI Input Unit can be configured with different DALI address (device support broadcast, group addresses and short addresses). Three types of reactions can be configured for each input: Static commands, Direct level or Toggle. In Static commands mode device transmit defined command each time a press is detected. The most useful commands are: MIN_LEVEL, MAX_LEVEL, UP or DOWN. If desirable user can set up any command listed in DALI standard (IEC 62386-102). In Direct level mode device transmit defined brightness level each time a press is detected (for example 50%). In Toggle mode device toggles between two commands each time a press is detected. The user can choose from 3 toggle functions: MIN/MAX, ON/OFF and Scene X/Scene Y. Scene X and Scene Y are settable number of DALI scenes which are toggled. The configuration can be changed using special programmer (on demand).
For the reaction on long press it is possible to set whether the command should be sent only once or it should be repeated (for example UP/DOWN commands). The period of repetition is also settable (1 second period). DALI Input Unit is delivered with default configuration.
DALI Input Unit is a DALI powered device therefore external DALI power supply has to be connected on the DALI line.

Note

The DALI Input Unit is intended to be used with push buttons that come back to non-active position after release. The compatibility with other devices should be discussed with the manufacturer. The push buttons used as input devices for DALI Input Unit must have mains rating (DALI bus provides basic insulation only).

Connections

Mains cable	Wires AWG 24 (0.5 mm²)
DALI cable	Wires AWG 24 (0.5 mm²)

Power

DALI voltage	12-25 V DC
DALI consumption	< 9 mA

Control Inputs

Voltage range	open 5 V DC / closed max. 0.3 V DC
Current range	max. 1 mA

Mechanical data

Housing	Encapsulated PCB
Weight	10 g
Dimensions	27 x 20 x 4 mm

Operating conditions

Ambient temp. range	0 °C - + 40 °C
Relative humidity	85 % (non-condensing)
Storage temp. range	-40 °C - +70 °C

1 Year Warranty

The Company reserves the right to change any product specifications without prior notification.

HEAD OFFICE
iLumTech
906 02 Dojč 419, Slovakia, Email: info@ilumtech.eu,www.ilumtech.eu

REV. 01 OCTOBER 2015